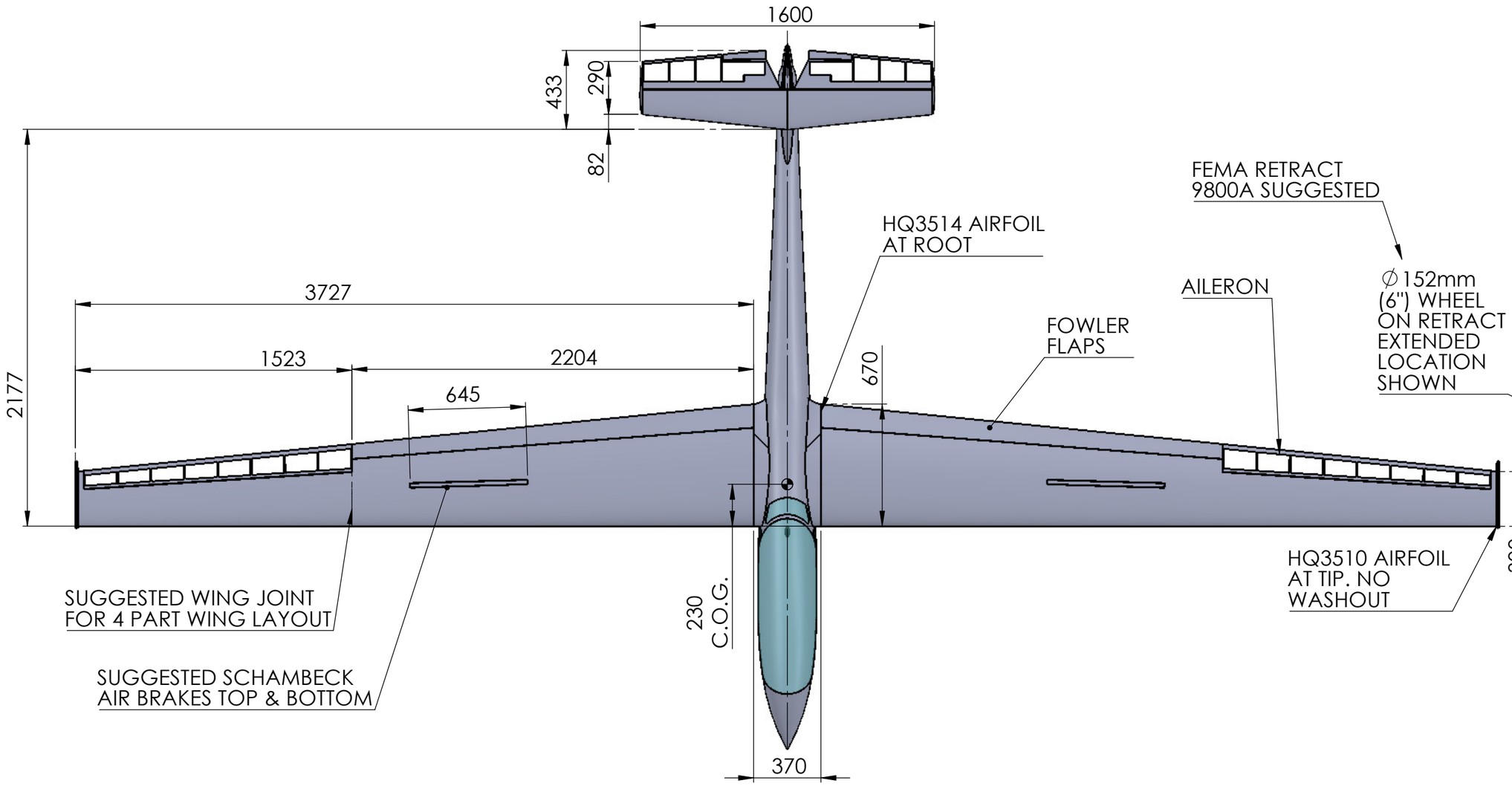

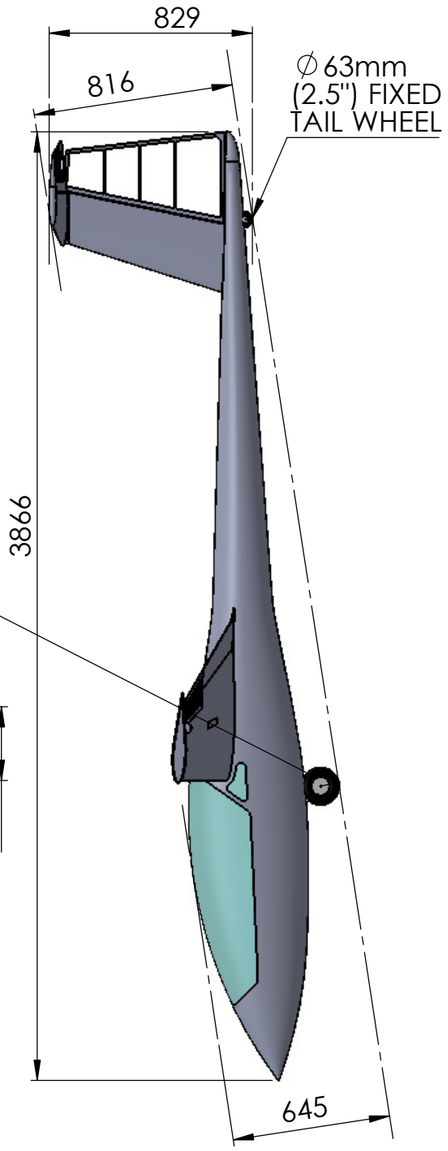

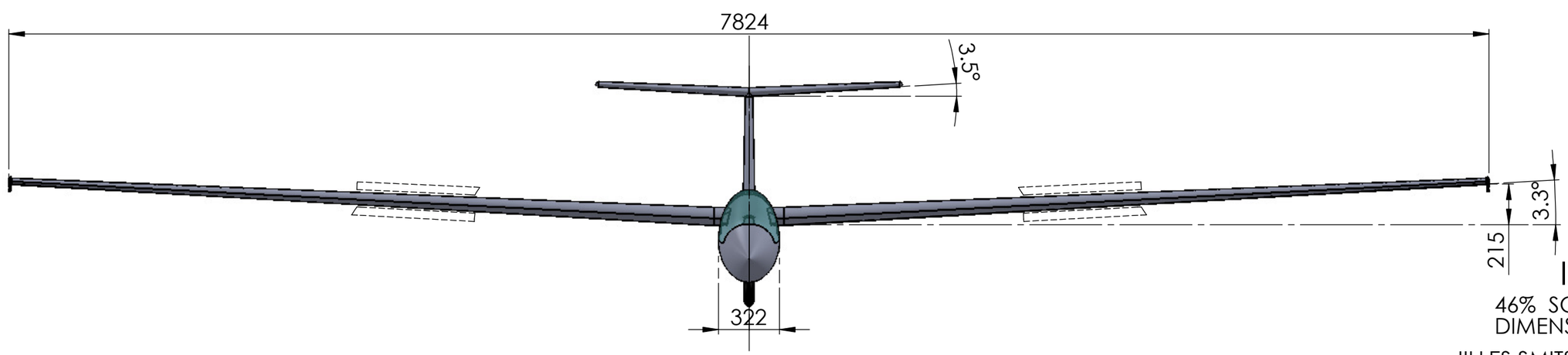

IS-28B2 GLIDER

46% SCALE MODEL NOMINAL DIMENSIONS

JILLES SMITS OCTOBER 2018

DRAWINGS NOT TO BE USED FOR COMMERCIAL PURPOSES WITHOUT PRIOR CONSENT FROM AUTHOR JILLES SMITS