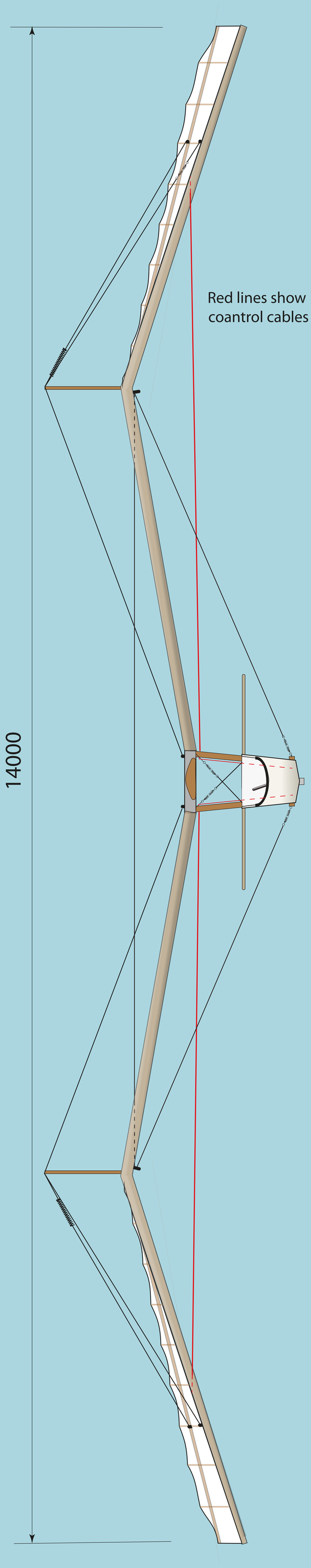

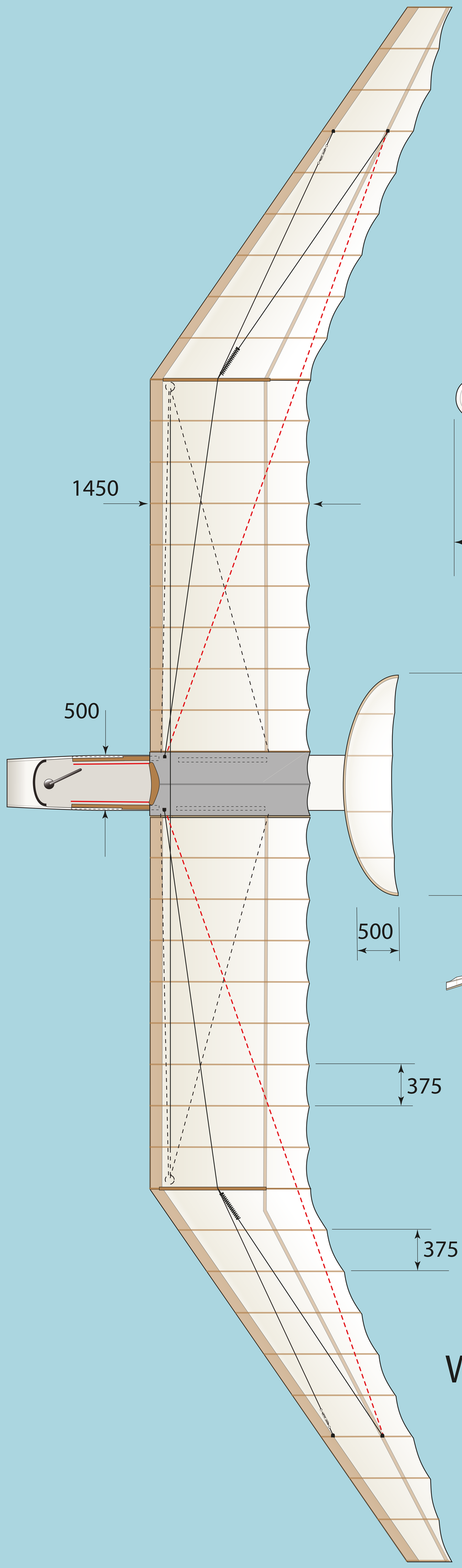

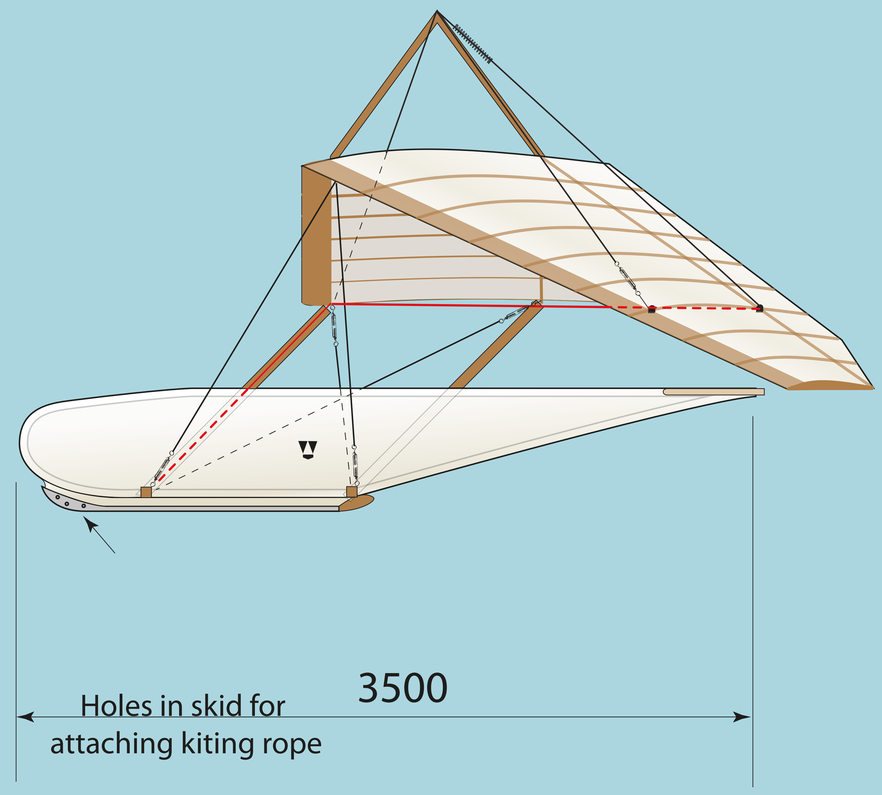

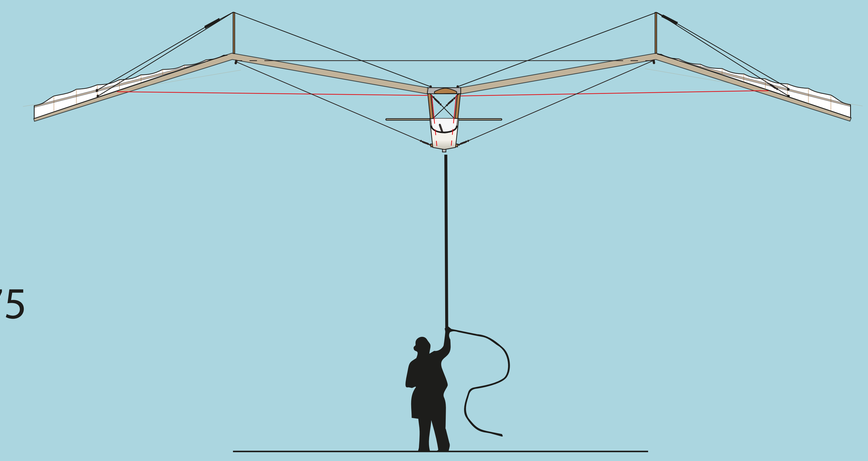

Weltensegler 'Torsionsmodell'

1921/22

0 0,5 2 4m

Drawn by: Vincent Cockett - 2016 ©

Note: - Data is not available for this Weltensegler. All dimensions have been calculated from a small number of images and represents the general layout only.